Brad White

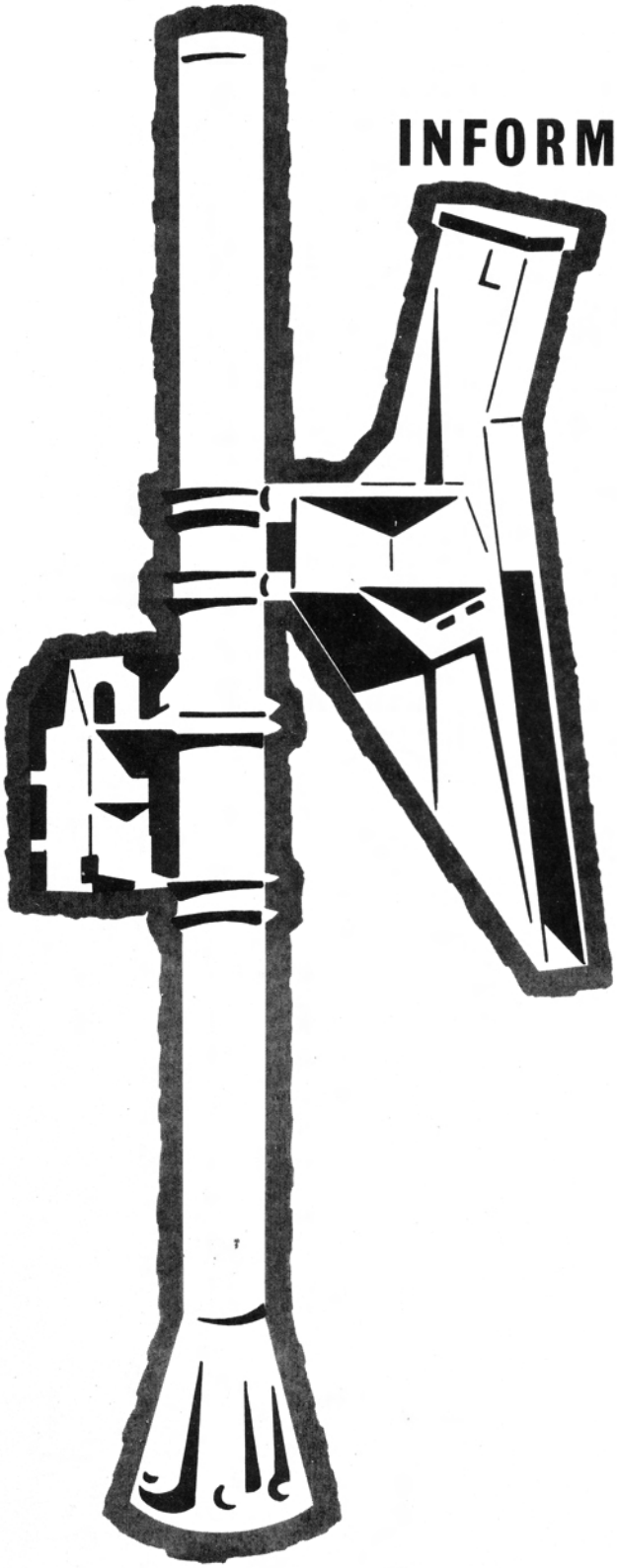

INFORMATION BULLETIN

ATLAS-TITAN

RADAR SURVEILLANCE SECURITY SYSTEM

AN/TPS-39

SYLVANIA ELECTRONIC SYSTEMS
Government Systems Management
for GENERAL TELEPHONE & ELECTRONICS

SYLVANIA ELECTRONIC SYSTEMS—WEST
MOUNTAIN VIEW, CALIFORNIA

INFORMATION BULLETIN

INTRUSION DETECTION SYSTEM

AN/TPS-39(V)

RADAR SURVEILLANCE EQUIPMENT

SYLVANIA ELECTRONIC SYSTEMS
Government Systems Management
for GENERAL TELEPHONE & ELECTRONICS

Sylvania Electronic Systems - West
Mountain View, California

64M125
December 1964

INTRODUCTION

This bulletin describes the Radar Surveillance System, AN/TPS-39(V), bistatic radar developed by Sylvania to detect intrusions at United States missile sites. The systems operate unattended, require minimal maintenance and support personnel. In addition, tests made in compliance with military specifications show that the equipment will perform satisfactorily under severe environmental conditions, has a demonstrated Mean Time Between Failure of 23,700 hours, and a Mean Time To Repair of less than 30 minutes.

The three operating surveillance systems utilized at Atlas and Titan bases, V2, V4, and V5, are shown in Figures 1 and 2. However, it should be noted that the equipment is highly versatile and may be adapted with little effort to provide surveillance over almost any given area and/or volume. In addition, such application would not necessitate modification to the peculiar maintenance equipment utilized for installation and maintenance of the prime mission equipment.

The capabilities of the AN/TPS-39 (V) systems, and their associated maintenance equipment coupled with their high degree of versatility indicate that the equipment could be utilized to provide security surveillance for multiple purposes. Some possible uses are:

1. Protection of warehouses – inside and outside,
2. Protection of building entrances or other portal areas,
3. Elevator shafts or silo areas,
4. Antenna farms, aircraft disbursal areas,
5. Backup to existing guard force in a quasi-perimeter configuration.

The basic Radar Surveillance System is the AN/TPS-39(V)2 depicted in the upper left corner of Figure 1. It consists of the following building blocks: two mounting posts and mounting bracketry, a receiver, a transmitter, two antennas, a

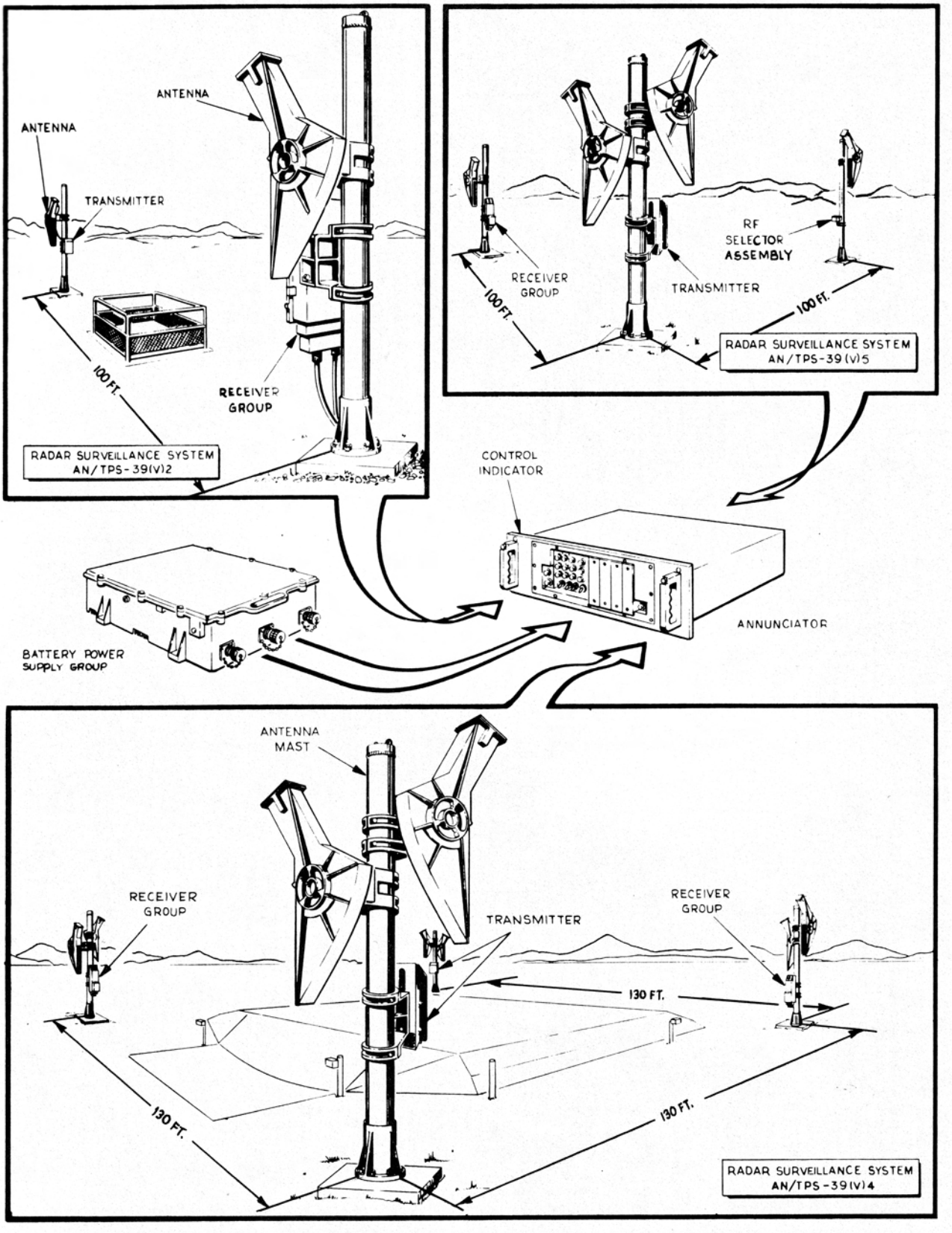

Figure 1. Radar Surveillance Systems

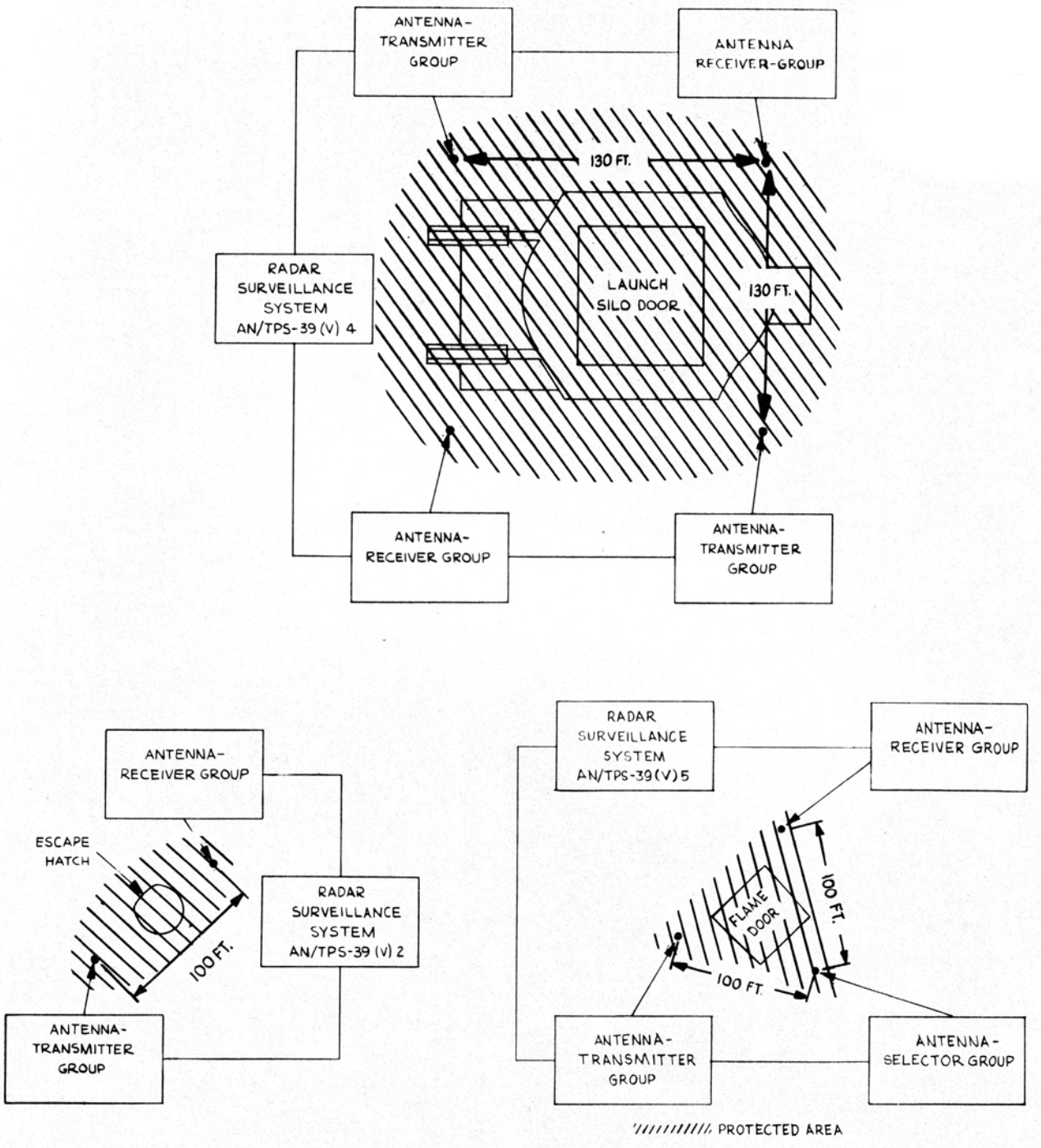

Figure 2. Typical Installation of Radar Surveillance Systems

control and readout device (annunciator) and its associated emergency battery power supply. This system will detect intrusions into an area of approximately 100 feet in diameter. At any given installation, the surveillance function is accomplished by a combination of the basic building blocks arranged in a configuration best suited to meet the particular requirements of the area to be protected. With these building blocks, different configurations can be constructed to provide surveillance and detect intrusions into almost any given area or volume.

The equipment used to install and maintain the AN/TPS-39(V) systems is shown in Figures 3, 4, and 5. The Wavemeter and Portable Fault Locator function provide the capability to isolate malfunction to a major replacable unit. The Radar Test Set Group, Figure 5, provides the capability to isolate the malfunction within a replacable unit to the component level.

This equipment can be operated by nonskilled personnel. Installation and maintenance can be accomplished by average military radio maintenance personnel.

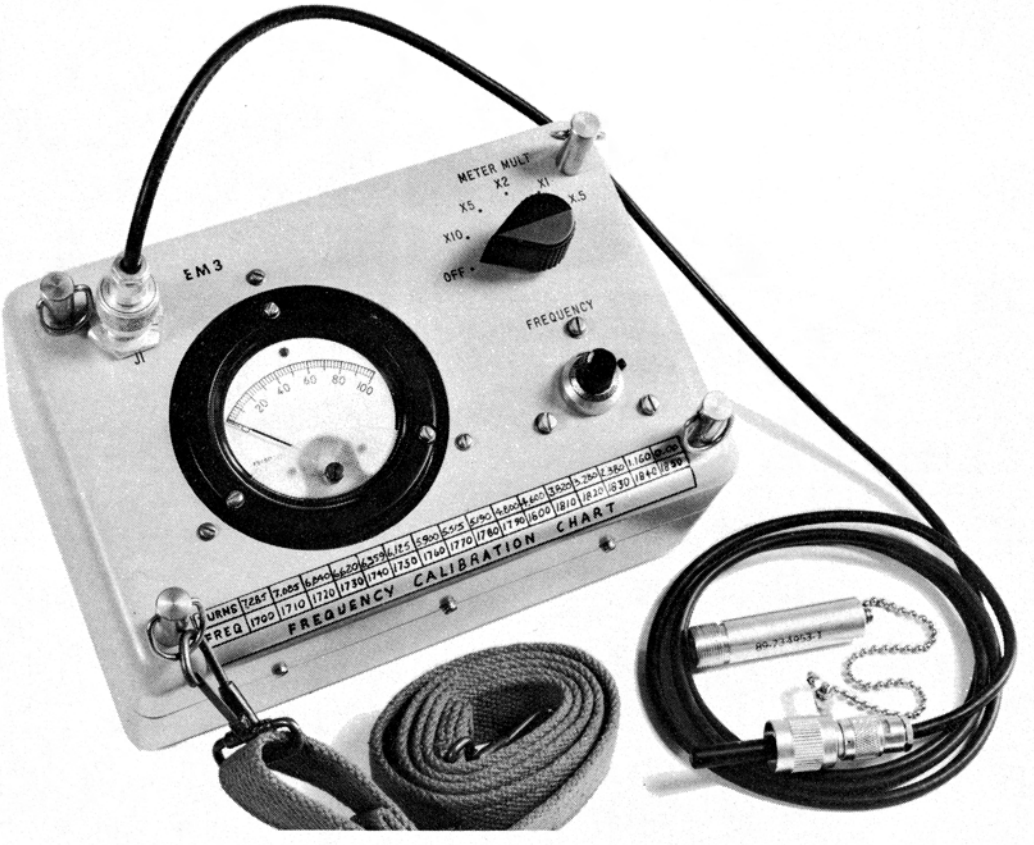

Figure 3. Wavemeter, FR-172/TPM-18
(Carried in top section of AN/TPM-18 case)

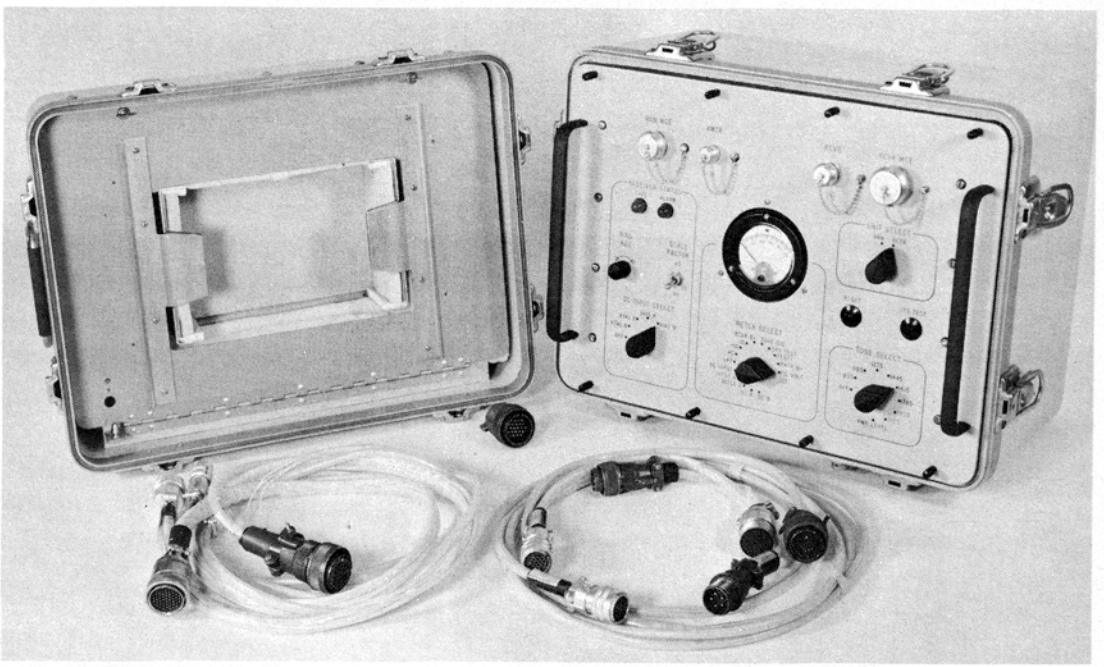

Figure 4. Radar Test Set, AN/TPM-18 (Portable Fault Locator)

Detailed checkout and maintenance of the AN/TPS-39(V) systems are performed with the more sophisticated item of test equipment shown below -- the Radar Test Set AN/TPM-19.

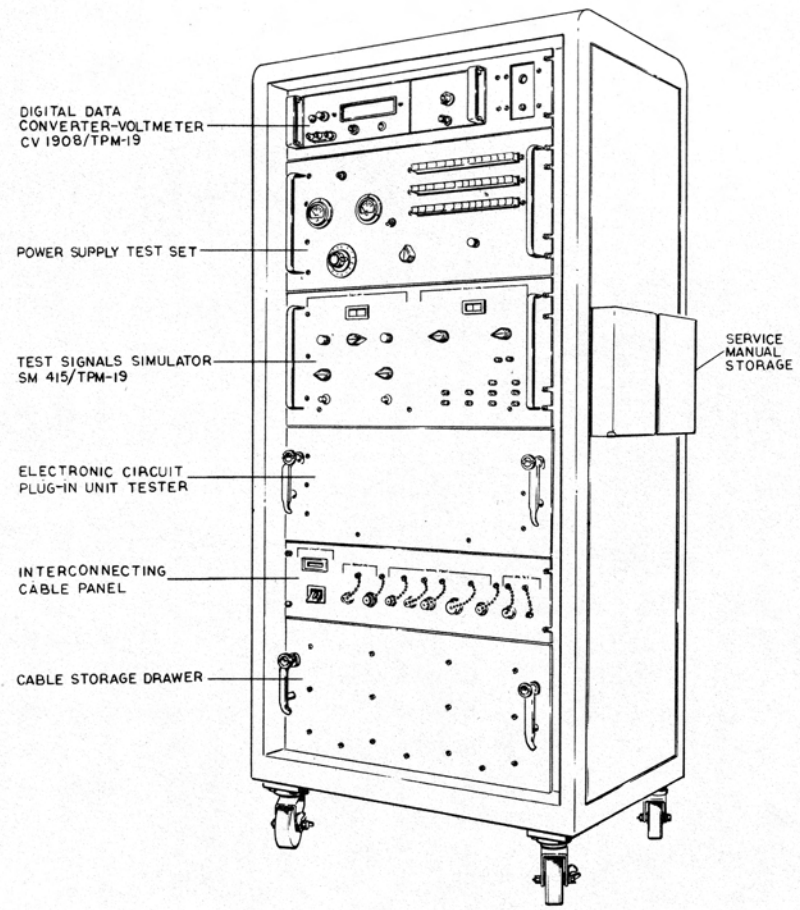

Figure 5. Radar Test Set Group, AN/TPM-19

The transmitter-antenna group (Figure 7) establishes an RF field which covers the protected area or volume. A disturbance of this field by a moving intruder modulates the microwave frequency and energy received at the antenna-receiver group (Figure 8). The processed signal from the receiver is transmitted via cable to the alarm annunciator which is shown in the center of Figure 1. The alarm is indicated simultaneously by both visual and audible alarms which are displayed and sounded within the alarm annunciator.

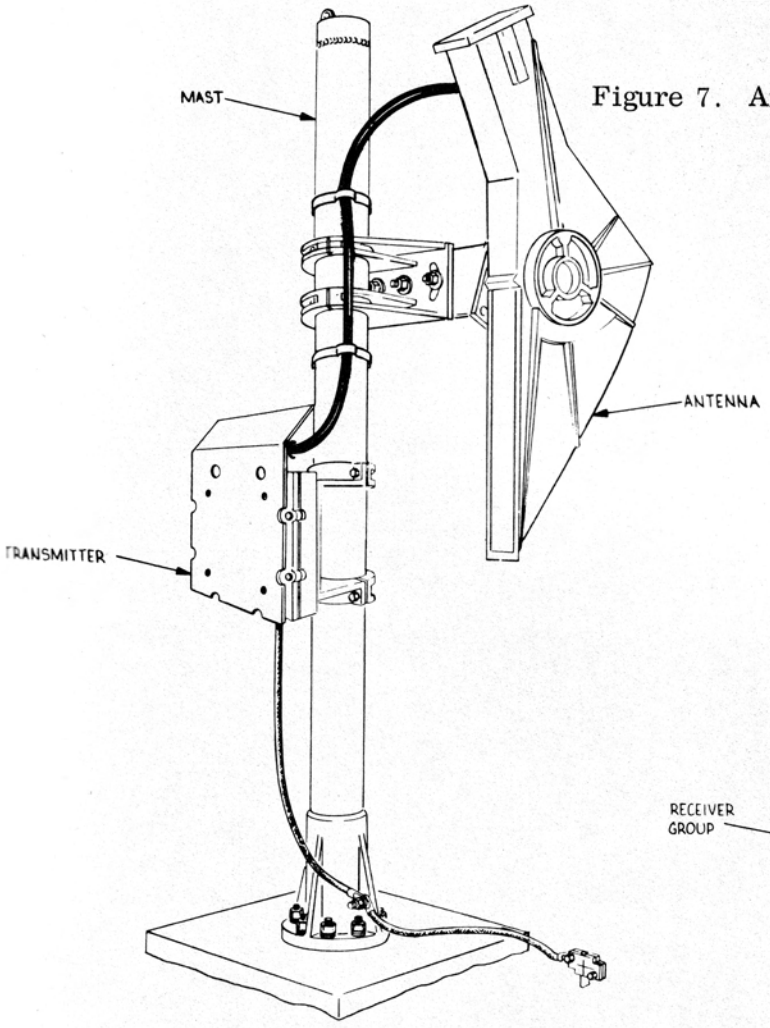

Figure 7. Antenna-Transmitter Group

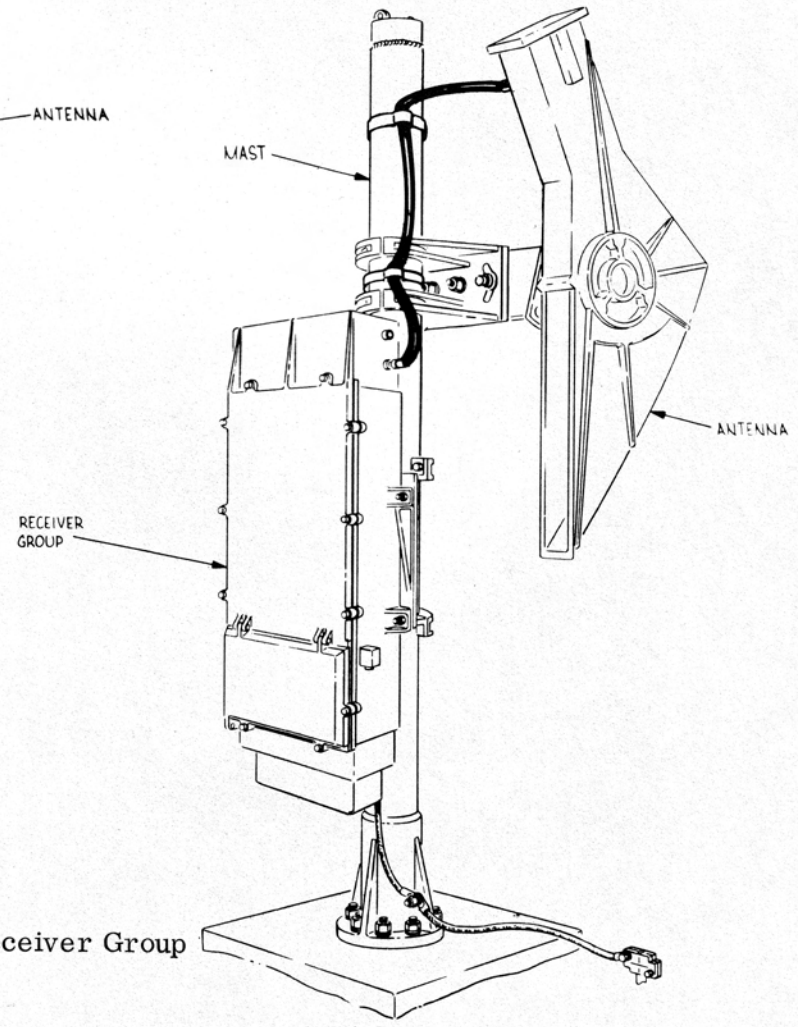

Figure 8. Antenna-Receiver Group

A picture of the equipment as installed on a Titan II missile complex is shown in Figure 9.

Figure 9. Titan II Missile Complex

Technical Description and Major Operating Characteristics

The basic capabilities and technical parameters of the AN/TPS-39(V) are listed below and meet, or exceed, the requirements of MIL-R-27146C for surveillance security systems.

A. System Capabilities

Characteristics	Capabilities
Walking Volumetric Coverage	
(V)2 System	Nominal 100-foot circle, 15 feet high
(V)4 System	Nominal 130-foot circle, 15 feet high
(V)5 System	Triangular area with sides approximately 100 feet, 15 feet high
Walking Rate	15 inches/second
False Alarm Rate	Not more than one alarm per seven days for equivalent (V)2 system
Mean Time Between Failures	6,000 hours per equivalent (V)2 system required, 23,700 demonstrated
Mean Time to Repair	30 minutes to isolate and replace major components using peculiar maintenance equipment
Routine Maintenance	Approximately one hour every 90 days
Discrimination	With parameters comparable to operational sites, discrimination extends to about a 15-pound animal
Useful Work	Detection of digging by any method of positioning with hand tools, an 18-cubic-inch hole within a 30-minute time period

B. System Operating Parameters

Frequency	1,703 - 1,803 Mc (adjustable)
Power Output	0.5 to 1.6 watts
Input Power	110 volts ac, 60 cps nominal
Emergency Standby Power	Internal batteries for two hours of emergency operation

C. Environmental Criteria

Humidity	Up to 98% relative
Barometric Pressure (Operating)	Sea level to 6000 feet
Wind Without Ice Load	Up to 75 knots
Wind With Ice Load	Up to 52 knots
Rain	Up to 5" per hour
Snow	Up to 30" measured vertically from ground level
Ice Load	1/2" of glaze ice measured radially
Temperature	
Outdoor Equipment	-40°F to +140°F
Indoor Equipment	+32°F to +123°F

REFERENCES

1. False Alarm Studies, Atlas/Titan Program Progress Review Meeting Book I, 29 October 1963.
2. Detection Studies, Progress Review Minutes, Book I, 29 October 1963.
3. Signal To Clutter Ratio, Progress Review Minutes, December 1963.
4. Progress Review Meeting Minutes, Book II, Part IV, 27 February 1964.
5. Progress Review Meeting Minutes, Book I, Part IV, December 1963.
6. Progress Review Meeting Minutes, Book I, In-Plant Test, 9 June 1964.
7. Progress Review Meeting Minutes, IF Noise Recording of Rain Tests, Penetration Contours, Horizontal versus Vertical Polarization, October 1963.
8. Progress Review Meeting Minutes, Book I, Part VII, December 1963.
9. Fitzgerald, Hale, Marietta, Excessive Climatic Conditions Report, Sylvania, 11 June 1964.
10. Progress Review Meeting Minutes, Book I, Part III, 26 February 1964.
11. J. Bridges, "Atlas/Titan System Performance Evaluation", 532-JB-158, 30 June 1964, Sylvania
12. Progress Review Minutes, Book I, December 1963, New Antennas, December 1963.
13. Sylvania Internal Memo, J. Bridges to L. Nelson, 25 May 1964
14. Report of Test on AN/TPS-39(V)2 Radar Surveillance System Snow Performance, Report No. 64R8, Sylvania.
15. Progress Review Minutes, PDI Evaluation, Book II, December 1963.
16. Progress Review Minutes, Cycle in Response Curve Due to Fences, Book I, October 1963.
17. Progress Review Minutes, FM Glitch Sensitivity Test, Book I, February 1964.
18. Lemson, Progress Review Minutes, Implementation of Nuisance Alarm Elimination Technique Based on Prior Recommendations, Book II, October 1963.
19. Progress Review Minutes, Post-Threshold Processing, Book I, February 1964.
20. Hale, Thomas, Back-Up Processor Report, Sylvania, 31 July 1964.
21. Progress Review Minutes, A Possible Stabilizing Effect For the Atlas/Titan Volumetric Security System During Rain and Snow.
22. Signature Studies for Target Identification, Progress Review Minutes, Book II, December 1963.
23. FM-AM Detection Experimental Evaluation, Progress Review Meeting Minutes, Book I, February 1964.
24. Snow, Progress Review Minutes, Book I, October 1963.
25. Snow Tests, Progress Review Minutes, Book II, October 1963.
26. RF Circuitry, Progress Review Minutes, Book I, December 1963.

27. Simulated Snow Tests, Progress Review Minutes, Book II, April 1964.

28. Frequency Allocations For On-Site Equipments, Progress Review Meeting Minutes, Book I, February 1964.

29. Cross, Kingman, Sylvania Memo, Atlas/Titan Single Channel Interference Tests, EE-27-AT, 13 May 1964.

30. R. Marietta, Final Vulnerability Report Atlas/Titan Security System, Document No. 64R22, dated 25 May 1964 (SECRET).

31. Fitzgerald, Hale, Mathematical Model for the Atlas/Titan Bistatic Radar Detection Process, Sylvania Report, 7 August 1964.

32. Chapman, Hale, Last, Wilson, Power Spectrum and Histogram Analysis of Clutter, TPS-39 Bistatic Radar, Sylvania Report, 31 July 1964.

33. Reliability Test Report AN/TPS-39(V), June 1964, Sylvania Report No. 64R14.

34. R. Forderhase, Reflection Coefficient and Propagation Studies, Sylvania Internal Memo, 4 July 1964.

35. R. Marietta, System Studies of Hard-Line Operation and Applications for the Atlas/Titan Security System, 7 August 1964.

36. R. Hale, Mutual Interference Study, Atlas/Titan TPS-39 Equipment, Sylvania Internal Report, 7 August 1964.

37. R. Hale, System Test Evaluation Report, C-728-9.1-337, 26 May 1964.

Sylvania solicits any questions regarding this equipment or its applications. Requests, either verbal or written, for further information or performance verification, should be directed to:

Mr. A. Card, telephone 415/966-2591
Mr. J. Keneally, telephone 415/966-3870

Sylvania Electronic Systems - West
P.O. Box 188
Mountain View, California

or

Mr. F. Joyce, telephone 301/337-6600
Sylvania Electronic Systems
1120 Connecticut Ave. N.W.
Washington, D.C. 20036

SYLVANIA ELECTRONIC SYSTEMS
Government Systems Management
for GENERAL TELEPHONE & ELECTRONICS

SYLVANIA ELECTRONIC SYSTEMS-WEST
P. O. Box 188
Mountain View, California